THE INFORMATION CONTAINED IN THIS DRAWING IS THE SOLE PROPERTY OF NC STATE UNIVERSITY. ANY REPRODUCTION IN PART OR WHOLE WITHOUT THE WRITTEN PERMISSION OF NC STATE UNIVERSITY IS PROHIBITED.
FILE: .3125in Pillow Block

# QTY. 4 EACH

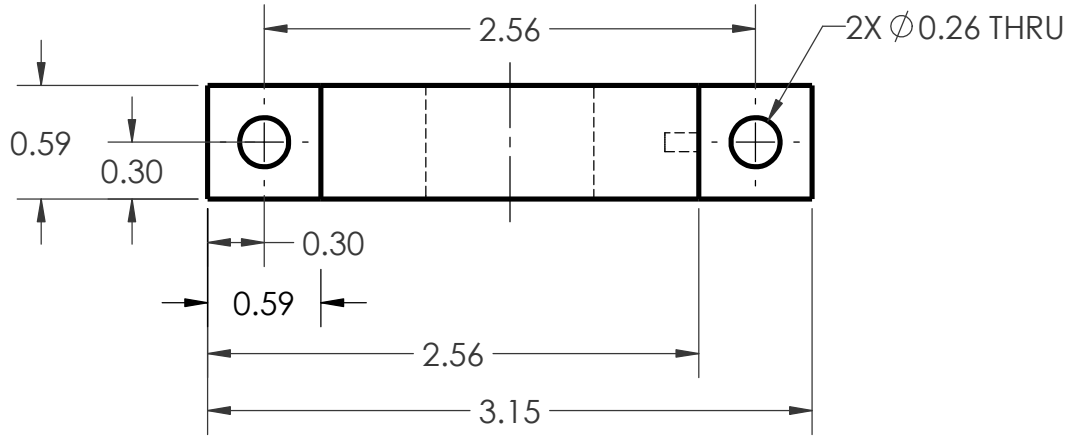


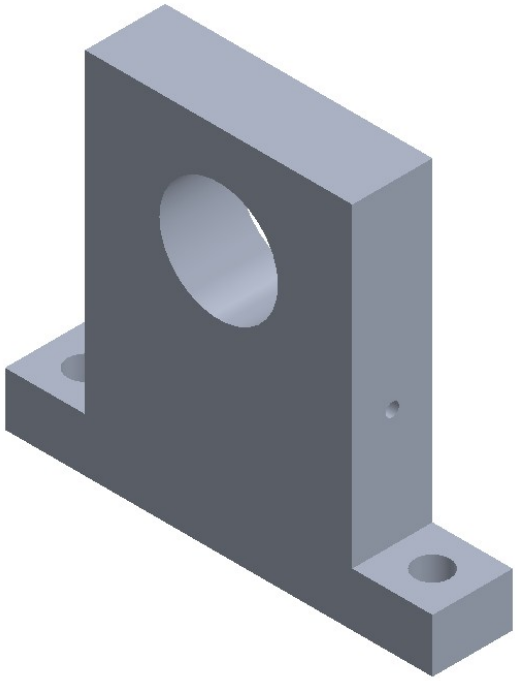

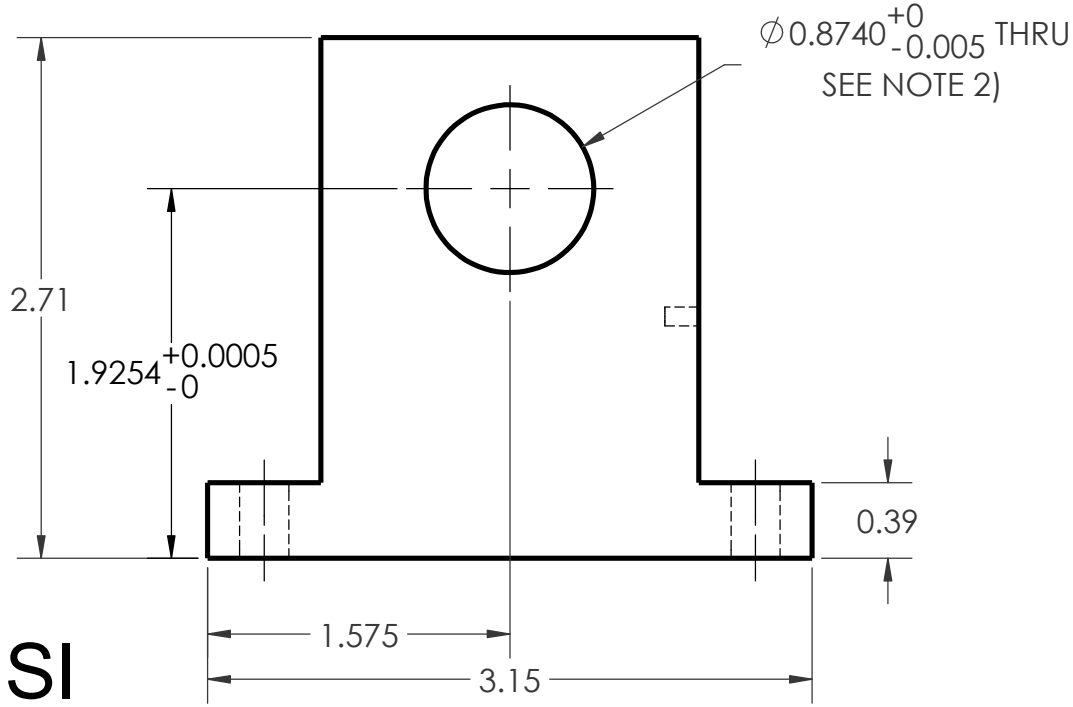


SI

## NOTES

1) DEBURR & BREAK ALL SHARP EDGES
2) PRESS FIT: BALL BEARING OD 0.875" +0" -0.0005"

| | | | | | |
|---|---|---|---|---|---|
| NORTH CAROLINA STATE UNIVERSITY<br>P.O. BOX 7801<br>Raleigh, North Carolina | UNLESS OTHERWISE SPECIFIED DIMENSIONS ARE IN INCHES<br>TOLERANCES ARE:<br>FRACTIONS ± DECIMALS .XX ± .01 .XXX ± .001 ANGLES ± 1 | DRAWN<br>JOHN GLENN | DATE<br>2/11/25 | TITLE<br>.3125" PILLOW BLOCK | |
| | | MATERIAL<br>STEEL | SCALE<br>1:1 | SIZE<br>A | PRT. NO.<br>1 | # 4 |

**SOLIDWORKS Educational Product. For Instructional Use Only.**

THE INFORMATION CONTAINED IN THIS DRAWING IS THE SOLE PROPERTY OF NC STATE UNIVERSITY. ANY REPRODUCTION IN PART OR WHOLE WITHOUT THE WRITTEN PERMISSION OF NC STATE UNIVERSITY IS PROHIBITED.
FILE: Pendulum Pillow Block

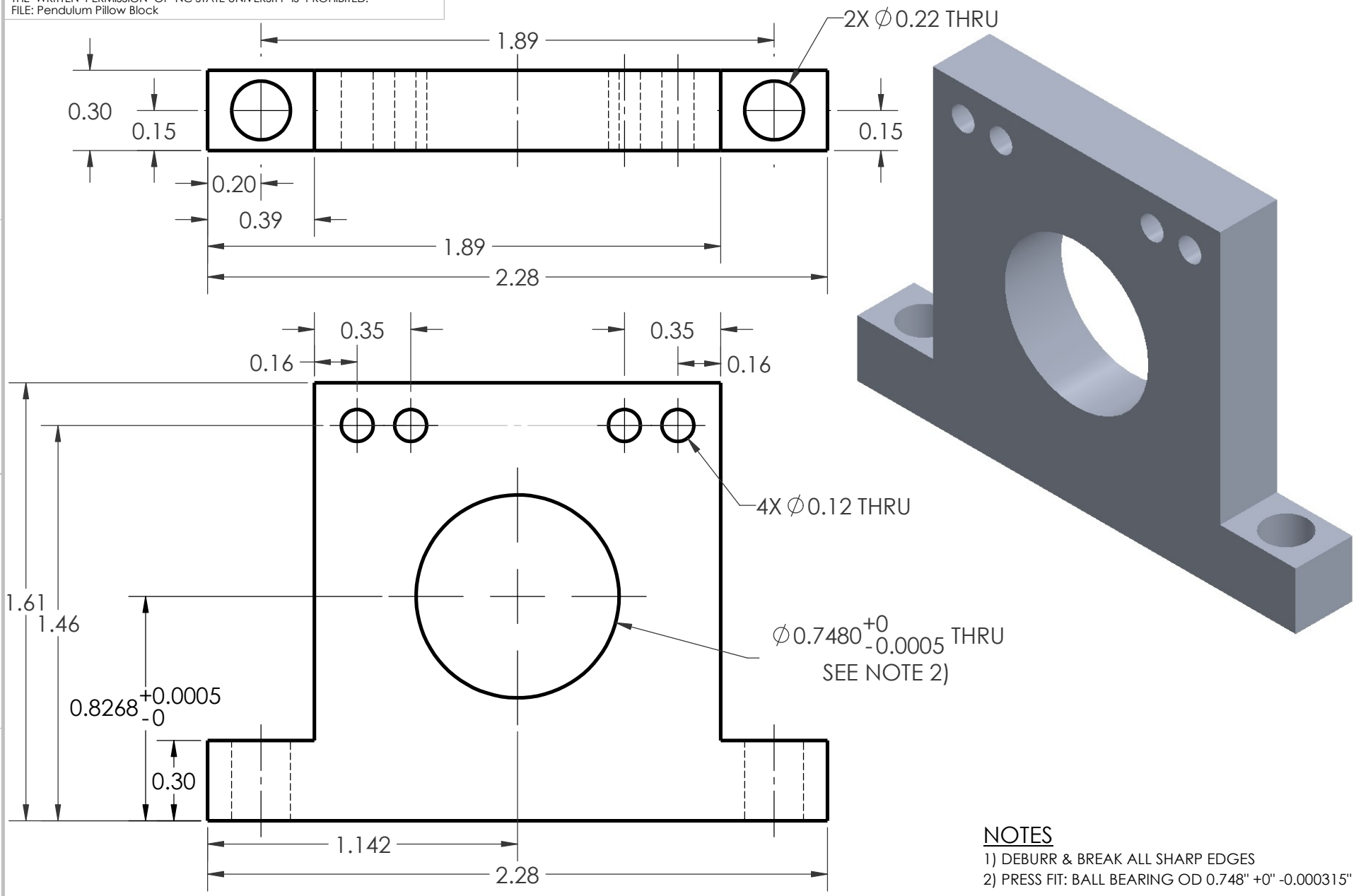


## NOTES

1) DEBURR & BREAK ALL SHARP EDGES
2) PRESS FIT: BALL BEARING OD 0.748" +0" -0.000315"

| | | | | | |
|---|---|---|---|---|---|
| NORTH CAROLINA STATE UNIVERSITY<br>P.O. BOX 7801<br>Raleigh, North Carolina | UNLESS OTHERWISE SPECIFIED DIMENSIONS ARE IN INCHES<br>TOLERANCES ARE:<br>FRACTIONS ± DECIMALS .XX ± .01 .XXX ± .001 ANGLES ± 1 | DRAWN<br>JOHN GLENN | DATE<br>2/13/25 | TITLE<br>PENDULUM PILLOW BLOCK | |
| | | MATERIAL<br>ALUMINUM | SCALE<br>2:1 | SIZE<br>A | PRT. NO.<br>2 | # 1 |

**SOLIDWORKS Educational Product. For Instructional Use Only.**

THE INFORMATION CONTAINED IN THIS DRAWING IS THE SOLE PROPERTY OF NC STATE UNIVERSITY. ANY REPRODUCTION IN PART OR WHOLE WITHOUT THE WRITTEN PERMISSION OF NC STATE UNIVERSITY IS PROHIBITED.
FILE: Encoder Pillow Block

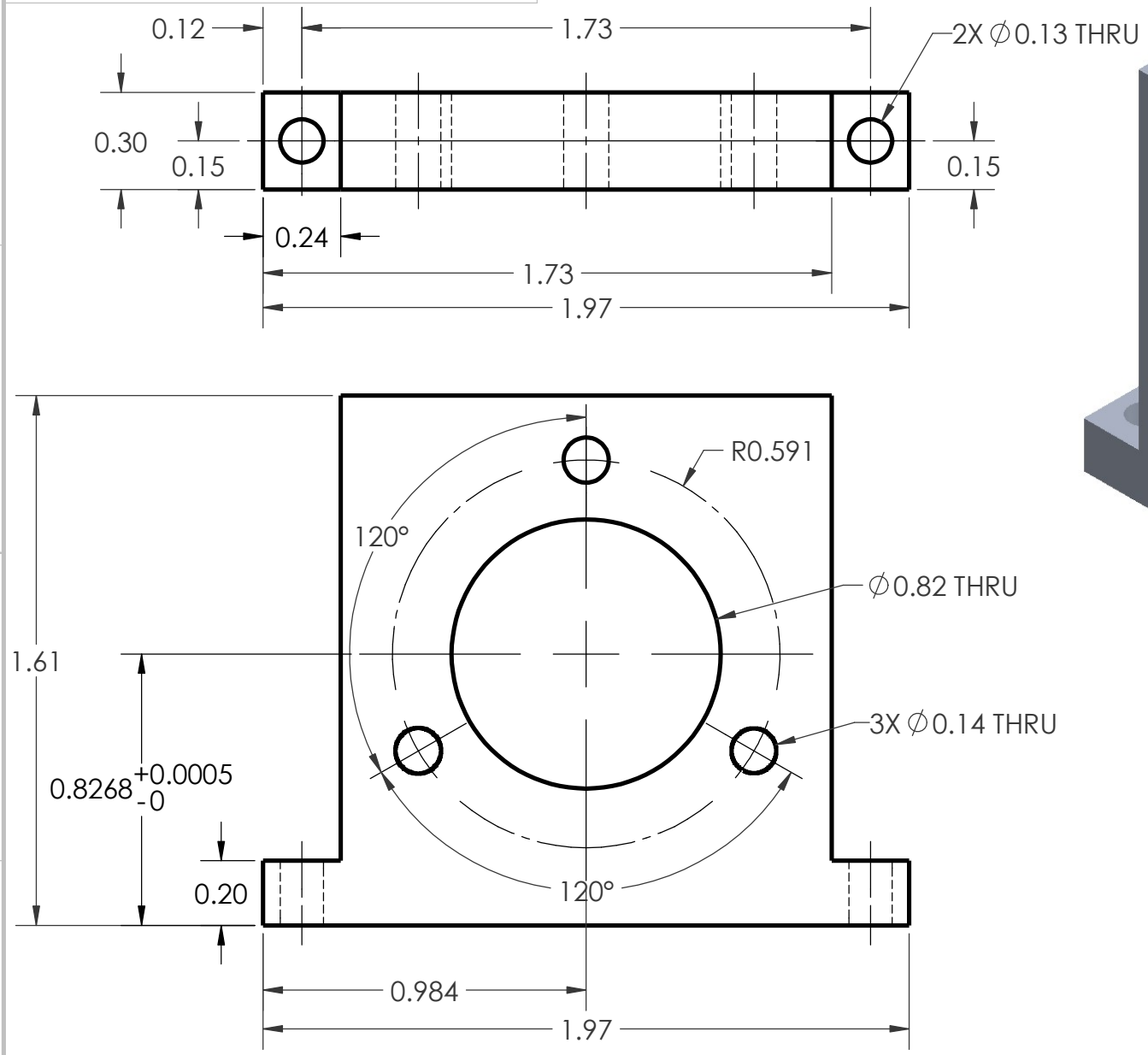


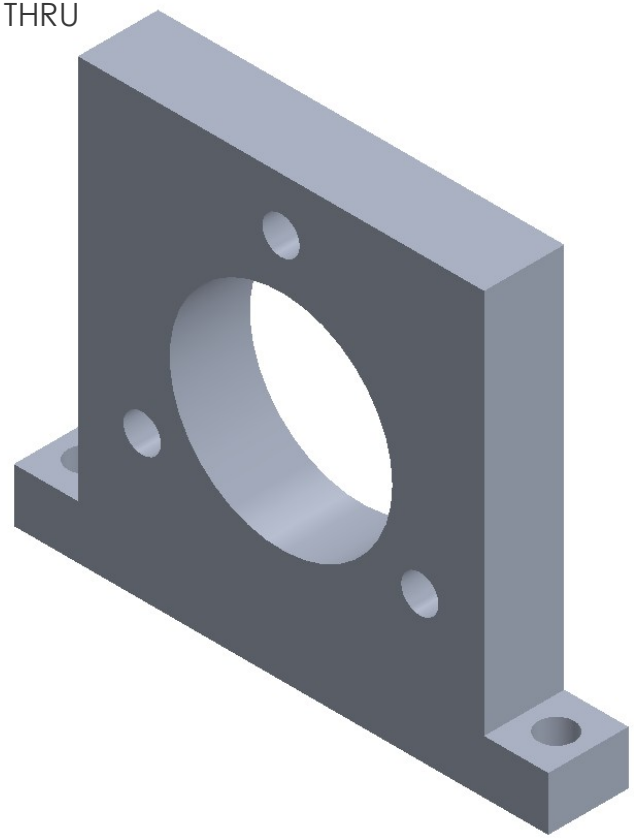

NOTES

1) DEBURR & BREAK ALL SHARP EDGES

| | | | | | |
|---|---|---|---|---|---|
| NORTH CAROLINA STATE UNIVERSITY<br>P.O. BOX 7801<br>Raleigh, North Carolina | UNLESS OTHERWISE SPECIFIED DIMENSIONS ARE IN INCHES<br>TOLERANCES ARE:<br>FRACTIONS ± DECIMALS .XX ± .01 .XXX ± .001 ANGLES ± 1 | DRAWN<br>JOHN GLENN | DATE<br>2/13/25 | TITLE<br>ENCODER BRACKET | |
| | | MATERIAL<br>ALUMINUM | SCALE<br>2:1 | SIZE A | PRT. NO. 3 # 1 |

**SOLIDWORKS Educational Product. For Instructional Use Only.**

THE INFORMATION CONTAINED IN THIS DRAWING IS THE SOLE PROPERTY OF NC STATE UNIVERSITY. ANY REPRODUCTION IN PART OR WHOLE WITHOUT THE WRITTEN PERMISSION OF NC STATE UNIVERSITY IS PROHIBITED.
FILE: Slide Plate v2

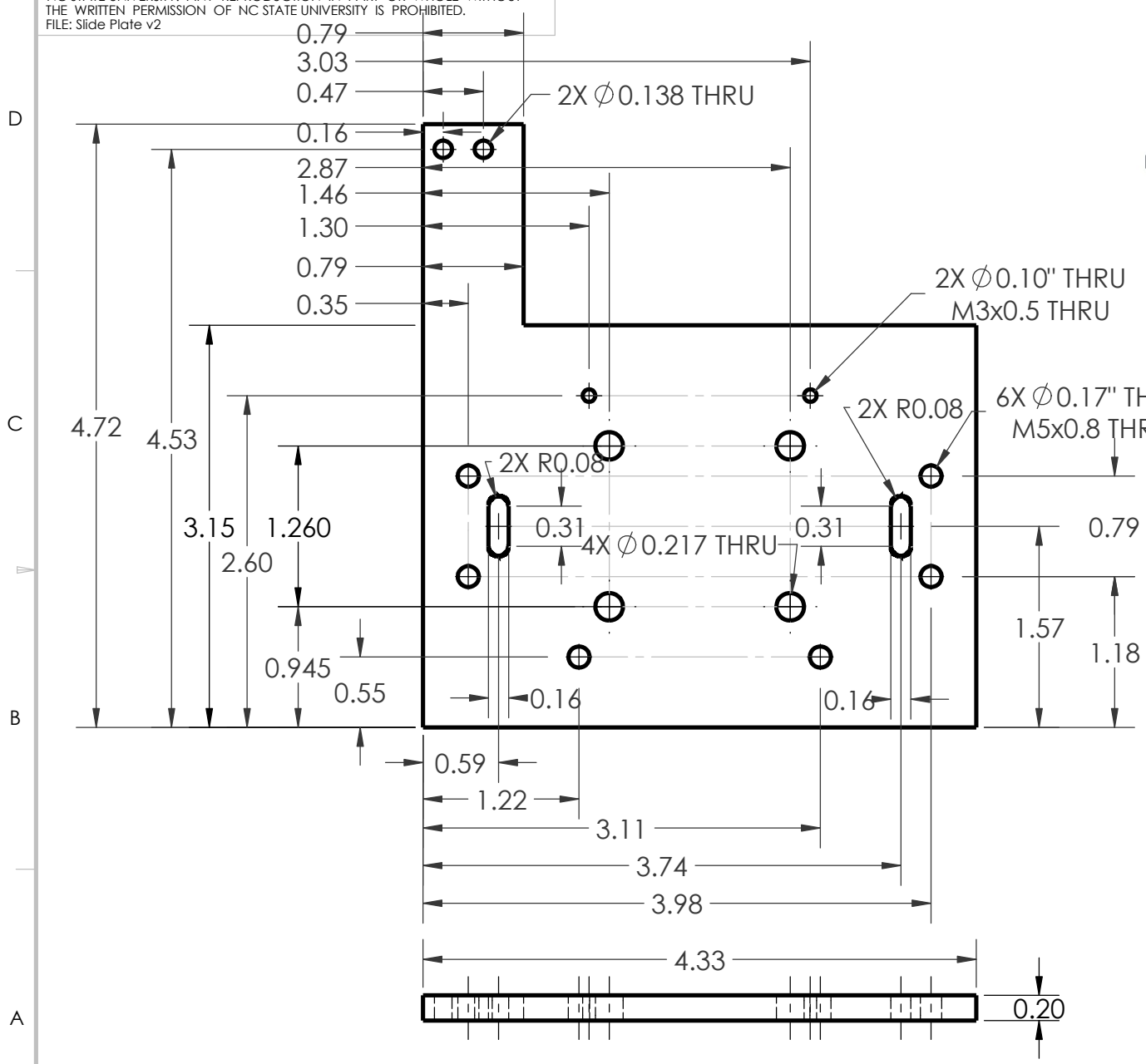


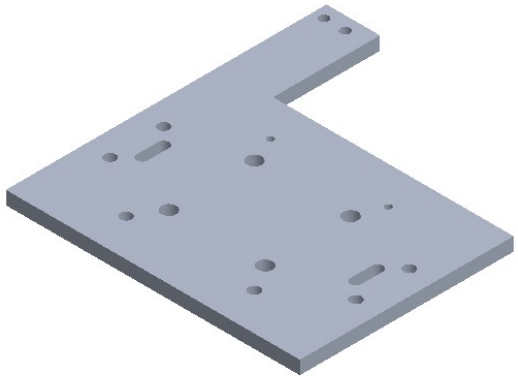

SCALE 1:2

NOTES

1) DEBURR & BREAK ALL SHARP EDGES

| | | | | |
|---|---|---|---|---|
| NORTH CAROLINA STATE UNIVERSITY<br>P.O. BOX 7801<br>Raleigh, North Carolina | UNLESS OTHERWISE SPECIFIED DIMENSIONS ARE IN INCHES<br>TOLERANCES ARE:<br>FRACTIONS ± DECIMALS .XX ± .01 .XXX ± .001 ANGLES ± 1 | DRAWN: JOHN GLENN | DATE: 2/13/25 | TITLE: SLIDE PLATE |
| | | MATERIAL: ALUMINUM | SCALE: 1:1.25 | SIZE: A · PRT. NO.: 4 · #: 1 |

**SOLIDWORKS Educational Product. For Instructional Use Only.**

THE INFORMATION CONTAINED IN THIS DRAWING IS THE SOLE PROPERTY OF NC STATE UNIVERSITY. ANY REPRODUCTION IN PART OR WHOLE WITHOUT THE WRITTEN PERMISSION OF NC STATE UNIVERSITY IS PROHIBITED.
FILE: Belt Lock REVISED

# QTY. 2 EACH

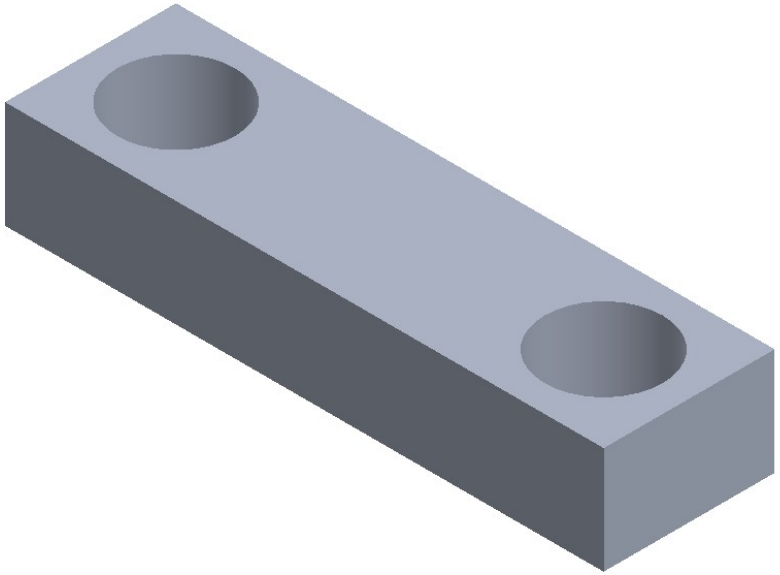

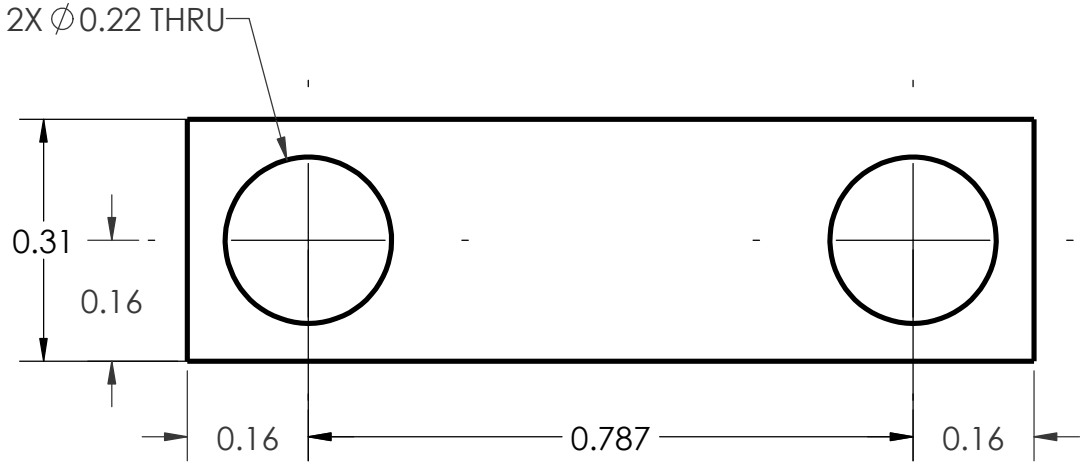


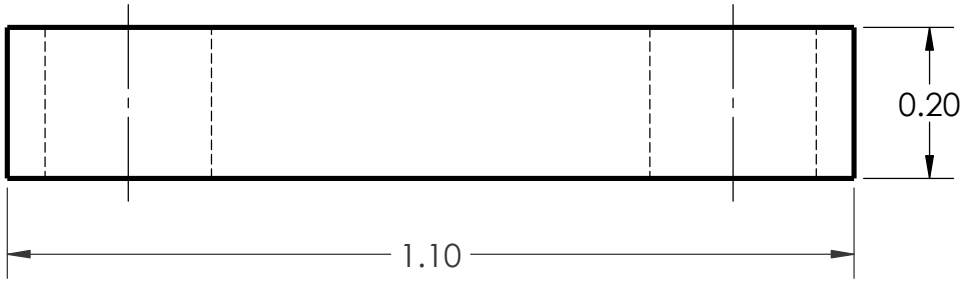


NOTES

1) DEBURR & BREAK ALL SHARP EDGES

| | | | | |
|---|---|---|---|---|
| NORTH CAROLINA STATE UNIVERSITY<br>P.O. BOX 7801<br>Raleigh, North Carolina | UNLESS OTHERWISE SPECIFIED DIMENSIONS ARE IN INCHES<br>TOLERANCES ARE:<br>FRACTIONS ± DECIMALS .XX ± .01 .XXX ± .001 ANGLES ± 1 | DRAWN: JOHN GLENN | DATE: 2/13/25 | TITLE: BELT LOCK |
| | | MATERIAL: ALUMINUM | SCALE: 4:1 | SIZE: A · PRT. NO.: 5 · #: 2 |

**SOLIDWORKS Educational Product. For Instructional Use Only.**

THE INFORMATION CONTAINED IN THIS DRAWING IS THE SOLE PROPERTY OF NC STATE UNIVERSITY. ANY REPRODUCTION IN PART OR WHOLE WITHOUT THE WRITTEN PERMISSION OF NC STATE UNIVERSITY IS PROHIBITED.
FILE: Pendulum Shaft

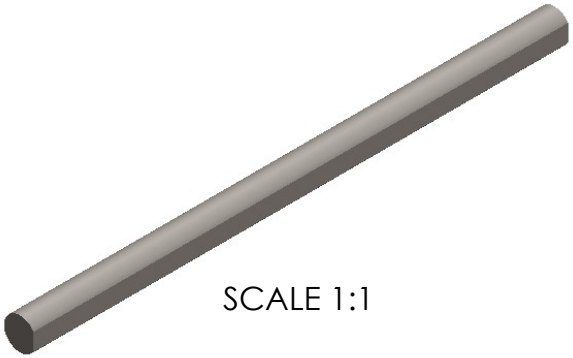

SCALE 1:1

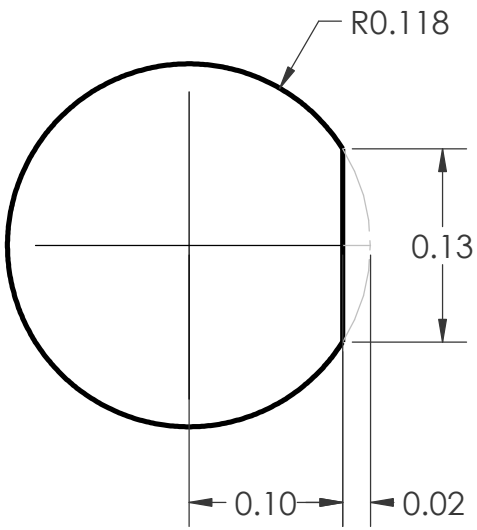


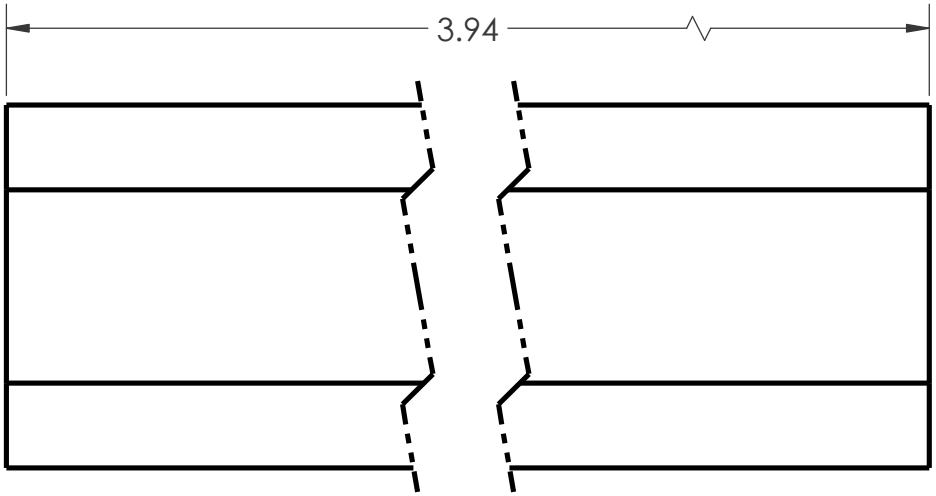


NOTES

1) DEBURR & BREAK ALL SHARP EDGES

| | | | | | |
|---|---|---|---|---|---|
| NORTH CAROLINA STATE UNIVERSITY<br>P.O. BOX 7801<br>Raleigh, North Carolina | UNLESS OTHERWISE SPECIFIED DIMENSIONS ARE IN INCHES<br>TOLERANCES ARE:<br>FRACTIONS ± DECIMALS .XX ± .01 .XXX ± .001 ANGLES ± 1 | DRAWN<br>JOHN GLENN | DATE<br>2/18/25 | TITLE<br>PENDULUM SHAFT | |
| | | MATERIAL<br>N/A | SCALE<br>8:1 | SIZE<br>A | PRT. NO.<br>6 | # 1 |

**SOLIDWORKS Educational Product. For Instructional Use Only.**

THE INFORMATION CONTAINED IN THIS DRAWING IS THE SOLE PROPERTY OF NC STATE UNIVERSITY. ANY REPRODUCTION IN PART OR WHOLE WITHOUT THE WRITTEN PERMISSION OF NC STATE UNIVERSITY IS PROHIBITED.
FILE: Rod Holder

## NOTES

1) DEBURR & BREAK ALL SHARP EDGES
2) SLIT FIT SHAFT OD 0.2362 +0 -0.0002
3) SLIT FIT FOR TUBE OD 0.2375

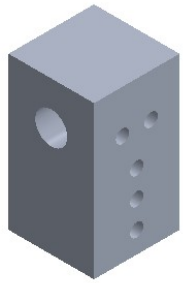

SCALE 1.5:1

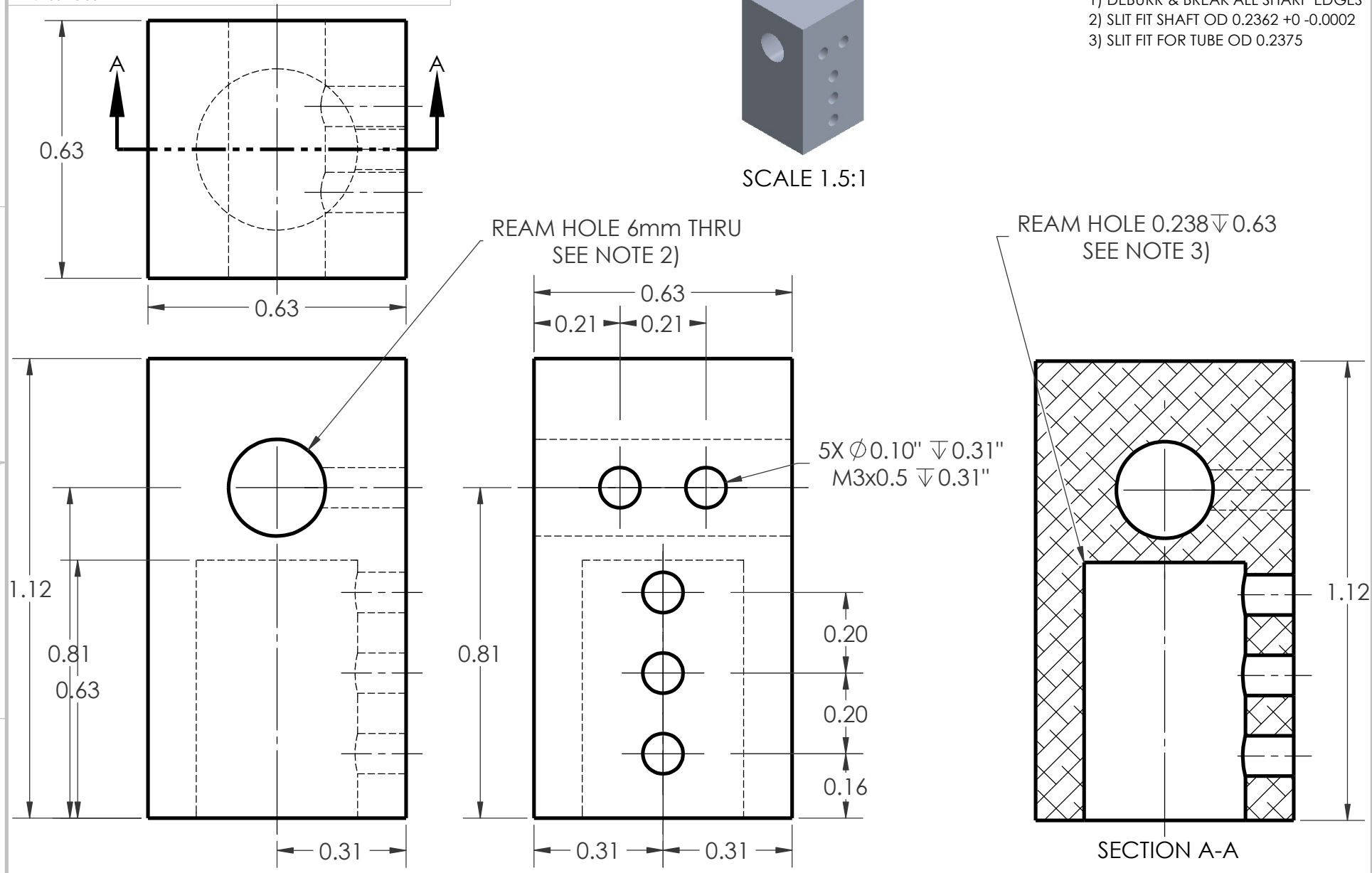


| | | | | |
|---|---|---|---|---|
| *NORTH CAROLINA STATE UNIVERSITY*<br>P.O. BOX 7801<br>Raleigh, North Carolina | UNLESS OTHERWISE SPECIFIED DIMENSIONS ARE IN INCHES<br>TOLERANCES ARE:<br>FRACTIONS ± DECIMALS .XX ± .01 .XXX ± .001 ANGLES ± 1 | DRAWN<br>JOHN GLENN | DATE<br>2/13/25 | TITLE<br>PENDULUM ROD JOINT |
| | | MATERIAL<br>ALUMINUM | SCALE<br>3:1 | SIZE A · PRT. NO. 7 · # 1 |

**SOLIDWORKS Educational Product. For Instructional Use Only.**

THE INFORMATION CONTAINED IN THIS DRAWING IS THE SOLE PROPERTY OF NC STATE UNIVERSITY. ANY REPRODUCTION IN PART OR WHOLE WITHOUT THE WRITTEN PERMISSION OF NC STATE UNIVERSITY IS PROHIBITED.
FILE: Base

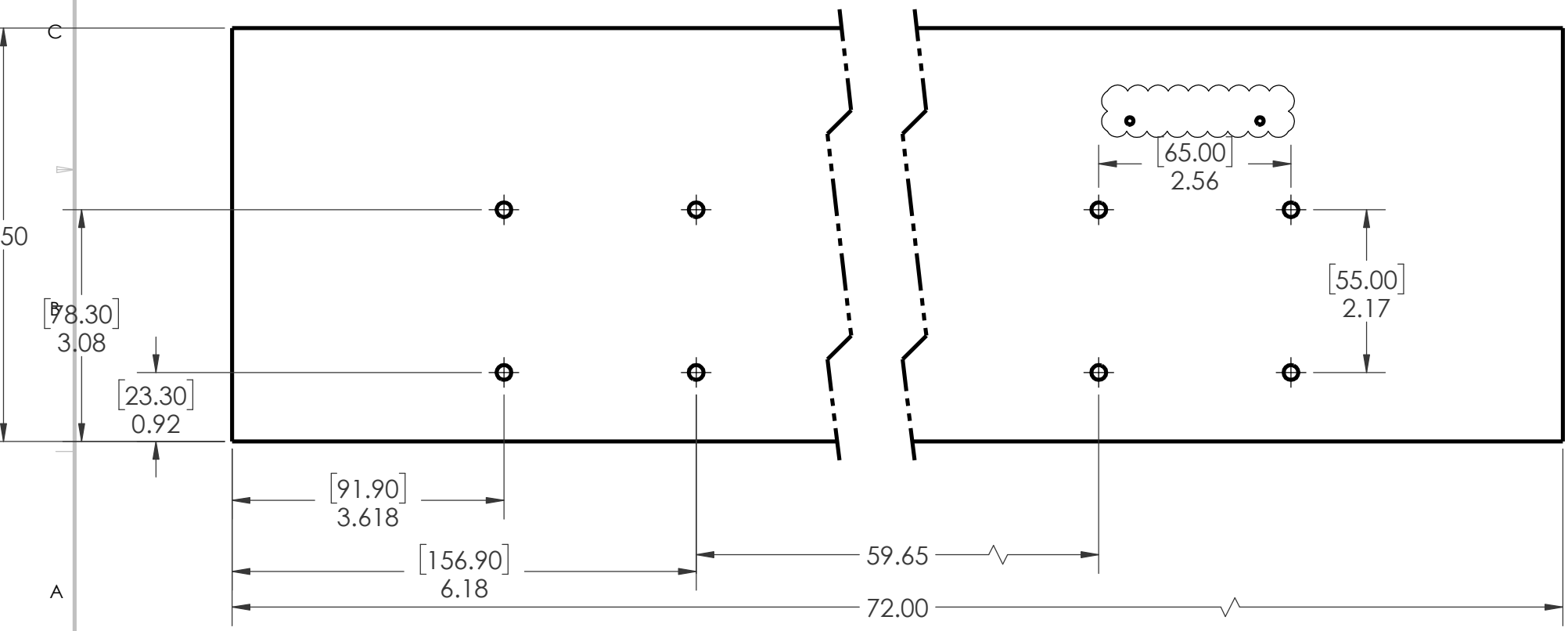


| | | | | | |
|---|---|---|---|---|---|
| NORTH CAROLINA STATE UNIVERSITY<br>P.O. BOX 7801<br>Raleigh, North Carolina | UNLESS OTHERWISE SPECIFIED DIMENSIONS ARE IN INCHES<br>TOLERANCES ARE:<br>FRACTIONS ± DECIMALS .XX ± .01 .XXX ± .001 ANGLES ± 1 | DRAWN<br>JOHN GLENN | DATE<br>3/30/25 | TITLE<br>BASE | |
| | | MATERIAL<br>PVC | SCALE<br>1:2 | SIZE A | PRT. NO. 8 # 1 |

**SOLIDWORKS Educational Product. For Instructional Use Only.**

THE INFORMATION CONTAINED IN THIS DRAWING IS THE SOLE PROPERTY OF NC STATE UNIVERSITY. ANY REPRODUCTION IN PART OR WHOLE WITHOUT THE WRITTEN PERMISSION OF NC STATE UNIVERSITY IS PROHIBITED.
FILE: Pulley Encoder Pillow Block

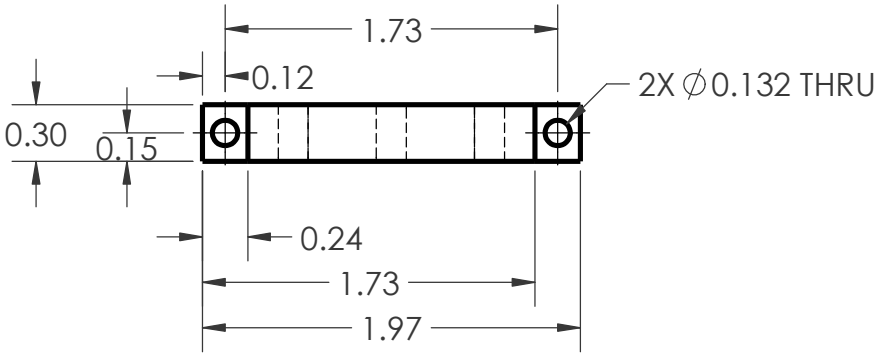


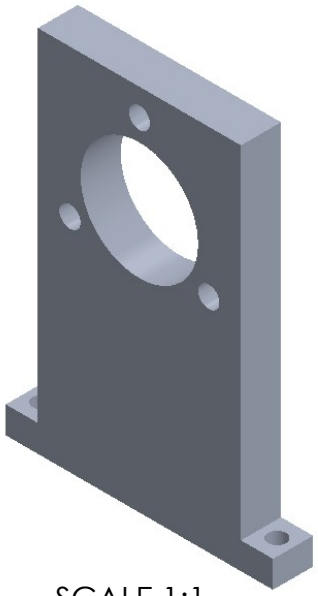

SCALE 1:1

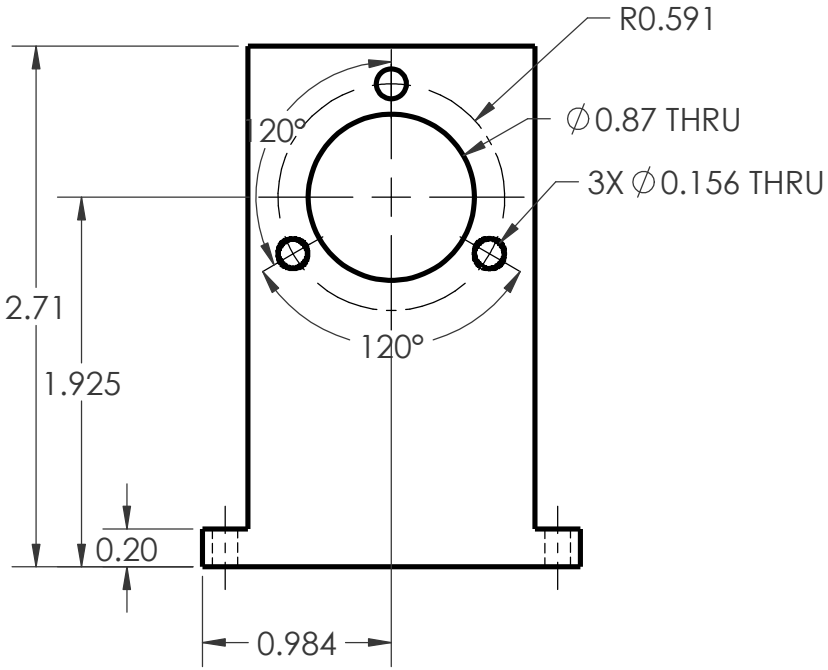


NOTES

1) DEBURR & BREAK ALL SHARP EDGES

| | | | | |
|---|---|---|---|---|
| NORTH CAROLINA STATE UNIVERSITY<br>P.O. BOX 7801<br>Raleigh, North Carolina | UNLESS OTHERWISE SPECIFIED DIMENSIONS ARE IN INCHES<br>TOLERANCES ARE:<br>FRACTIONS ± DECIMALS .XX ± .01 .XXX ± .001 ANGLES ± 1 | DRAWN: JOHN GLENN | DATE: 11/10/25 | TITLE: LINEAR ENCODER MOUNT |
| | | MATERIAL: ALUMINUM | SCALE: 1:1 | SIZE: A · PRT. NO.: 9 · #: 1 |

**SOLIDWORKS Educational Product. For Instructional Use Only.**

THE INFORMATION CONTAINED IN THIS DRAWING IS THE SOLE PROPERTY OF NC STATE UNIVERSITY. ANY REPRODUCTION IN PART OR WHOLE WITHOUT THE WRITTEN PERMISSION OF NC STATE UNIVERSITY IS PROHIBITED.
FILE: Motor Base Mount

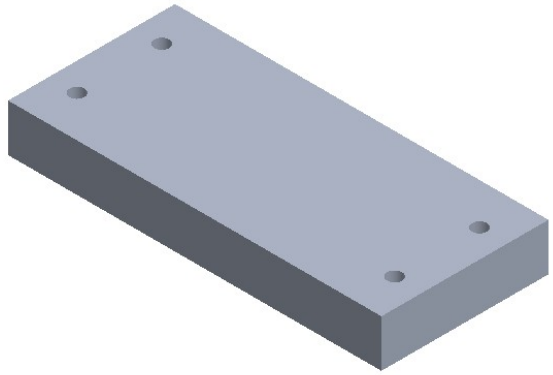

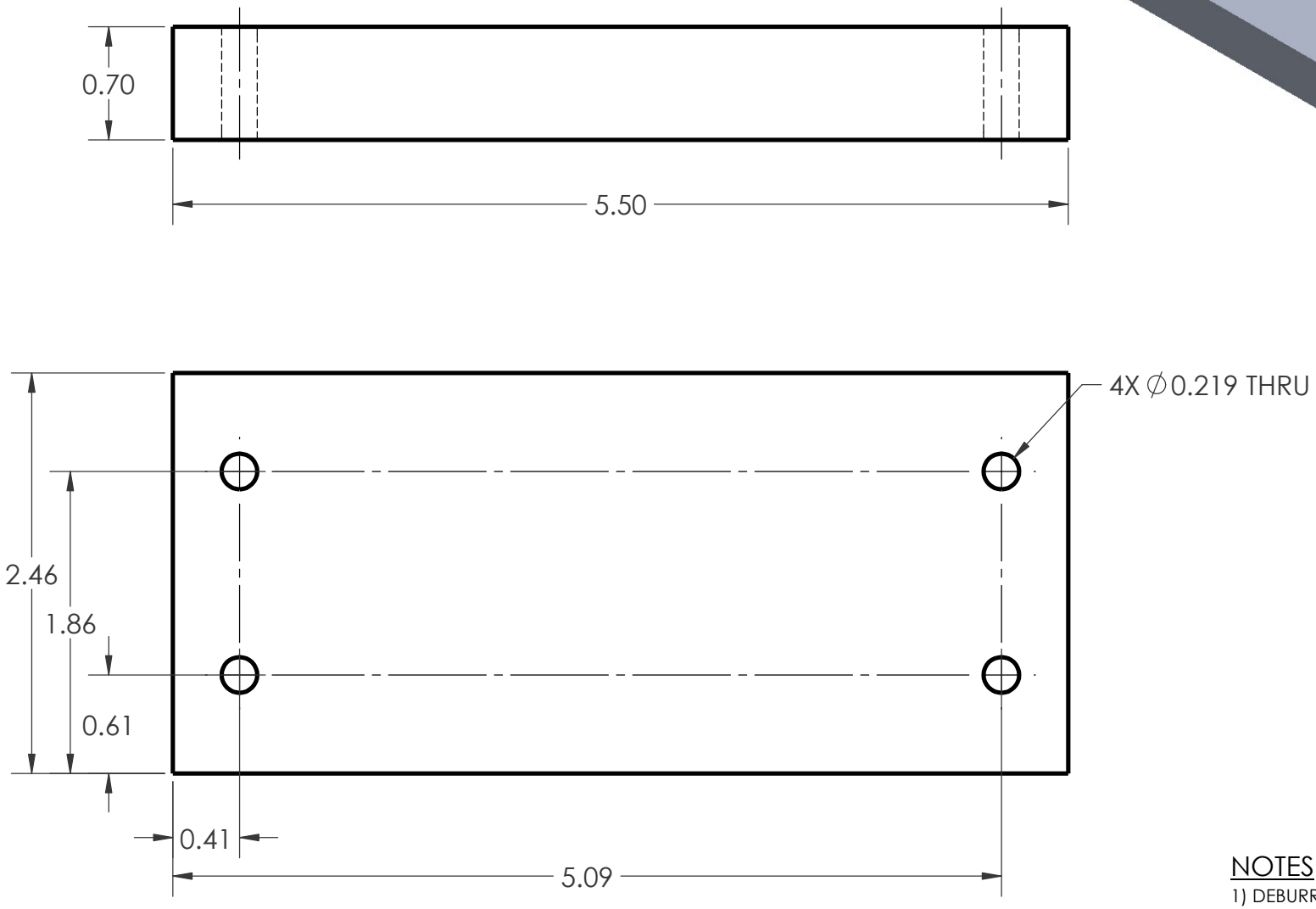


NOTES

1) DEBURR & BREAK ALL SHARP EDGES

| | | | | |
|---|---|---|---|---|
| NORTH CAROLINA STATE UNIVERSITY<br>P.O. BOX 7801<br>Raleigh, North Carolina | UNLESS OTHERWISE SPECIFIED DIMENSIONS ARE IN INCHES<br>TOLERANCES ARE:<br>FRACTIONS ± DECIMALS .XX ± .01 .XXX ± .001 ANGLES ± 1 | DRAWN JOHN GLENN | DATE 11/10/25 | TITLE MOTOR MOUNT |
| | | MATERIAL ALUMINUM | SCALE 1:1 | SIZE A / PRT. NO. 10 / # 1 |

**SOLIDWORKS Educational Product. For Instructional Use Only.**

THE INFORMATION CONTAINED IN THIS DRAWING IS THE SOLE PROPERTY OF NC STATE UNIVERSITY. ANY REPRODUCTION IN PART OR WHOLE WITHOUT THE WRITTEN PERMISSION OF NC STATE UNIVERSITY IS PROHIBITED.
FILE: Inverted Pendulum ASSEMBLY

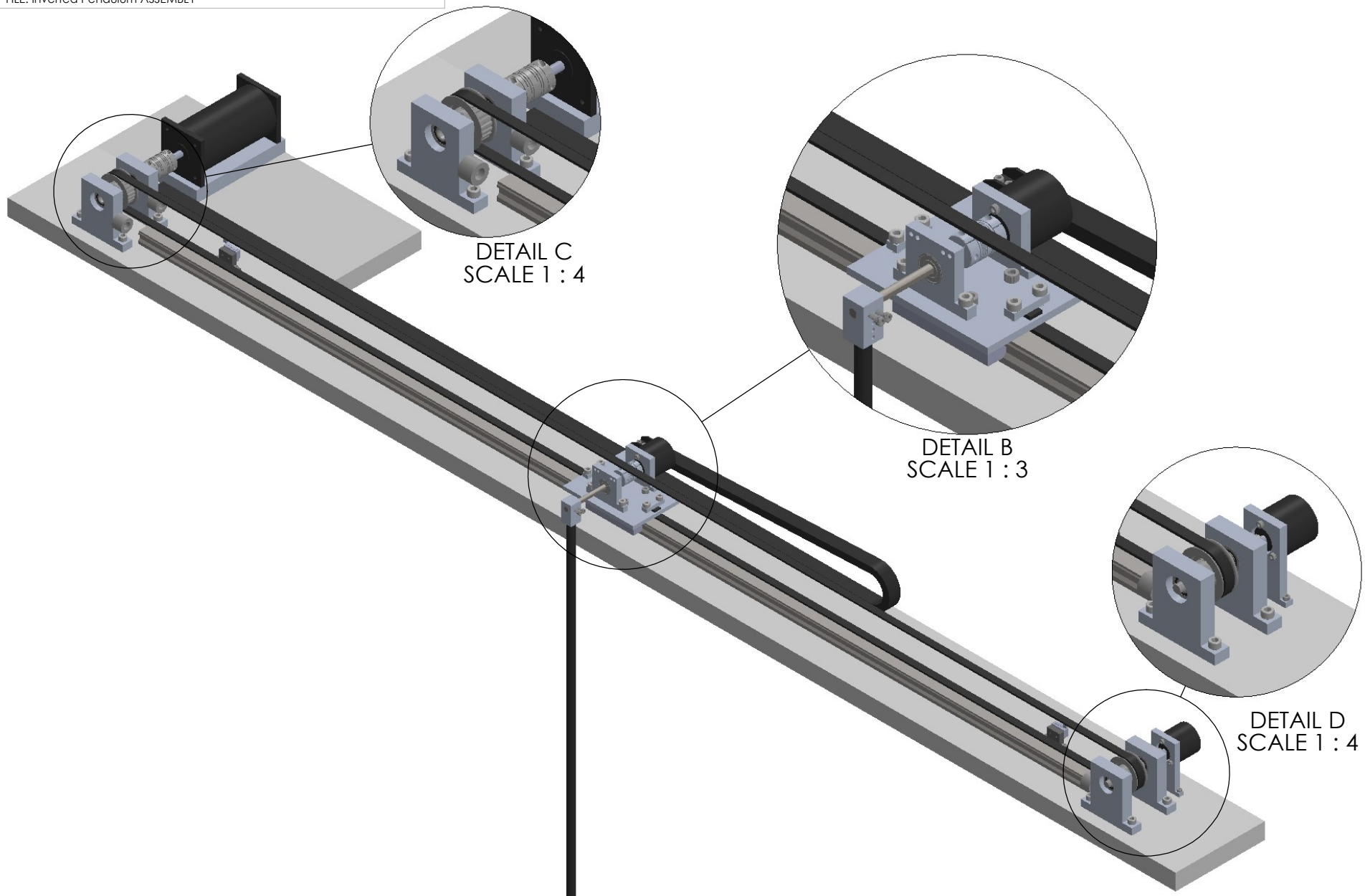


NORTH CAROLINA STATE UNIVERSITY
P.O. BOX 7801
Raleigh, North Carolina

UNLESS OTHERWISE SPECIFIED
DIMENSIONS ARE IN INCHES
TOLERANCES ARE:
FRACTIONS ± | DECIMALS .XX ± .01 .XXX ± .001 | ANGLES ±

| DRAWN | DATE | TITLE | | |
|---|---|---|---|---|
| JOHN GLENN | 2/14/25 | ASSEMBLY VIEW | | |
| MATERIAL | SCALE | SIZE | PRT. NO. | # |
| MATERIAL | 1:6 | A | N/A | 1 |

**SOLIDWORKS Educational Product. For Instructional Use Only.**